VOLTEK SYSTEMS™

by United Safety Incorporated

OWNER'S MANUAL

VOLTEK NS™

Power Line Warning System

Working with you to keep you safe around overhead power lines

Voltek Systems products manufactured by:

United Safety Incorporated
3220 US HIGHWAY 93 S
Suite 2
Kalispell, MT 59901
(800) 755-4854

www.volteksystems.com

FOR YOUR SAFETY:

Failure to follow operating instructions could result in death or serious injury. Please read and follow all instructions and guidelines before using products.

United Safety Incorporated and its distributors cannot be held responsible for improper or neglected maintenance, improper installation, or behavior that violates State, Federal an international laws and guidelines.

THIS IS AN ASSISTIVE AND INTERACTIVE DEVICE-it cannot guarantee operator safety

Do not use product or machinery within 20’ from overhead power lines.

Do not operate any part of equipment directly above or below overhead power lines.

Contact with high voltage will result in serious injury or death. Observe general safety precautions when near high voltage power lines.

If product is damaged or collides with obstructions, remove unit immediately and return to the manufacturer for repair or replacement. Operating a damaged unit could lead to system failure.

This device is used to detect 50 and 60 Hz OVERHEAD power lines greater than 5000V volts

By using United Safety Incorporated products you understand and agree the dangers of operating machinery or equipment near overhead power lines and are familiar with associated risks.

In no event shall United Safety Incorporated or its distributors be liable for any direct, indirect, punitive, incidental, special consequential damages, to property or life, whatsoever arising out of or connected with the use or misuse of our products.

The Voltek NS does not measure or indicate distance. Power line proximity alarms measure relative strength of electromagnetic fields surrounding overhead power lines. Proximity alarms are interactive devices provided to assist you the operator in avoiding contact with power lines.

It is the expressed goal of United Safety Incorporated to provide you with the best safety products available, however it is imperative that the operator takes time to become fully educated in the potential hazards his or her work environment. We work to provide you with an extra measure of safety, however it is ultimately up to you to maintain a hazard-free job-site. Have a safe and productive day and let us know if we can do anything further to help you with your power line safety needs.

Sincerely,

United Safety Incorporated staff

VOLTEK NS SYSTEM INCLUDES:

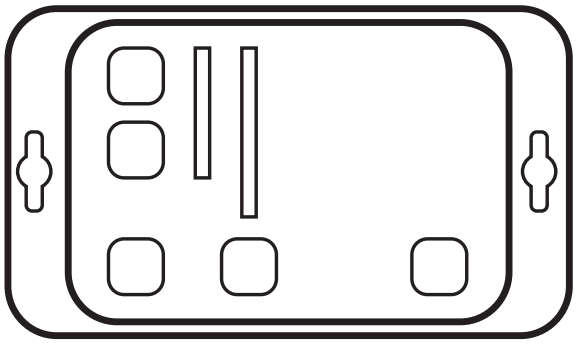

Voltek NS

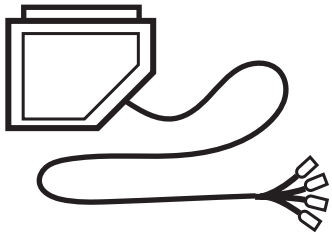

20’ wire harness

trim-to-length linear wire antenna

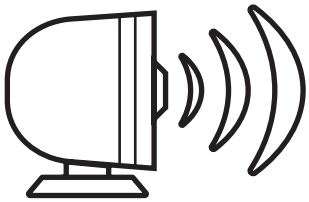

external siren

power and E-stop connector kit

solderable splice connector (x4)

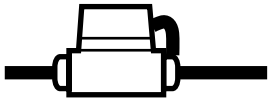

fuse holder with 3A fuse

antenna termination kit

twist cap wire connector

heat shrink tube

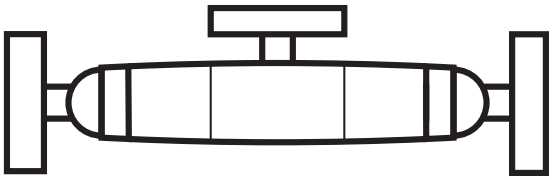

variable angle mounting bracket for Voltek NS

VOLTEK NS FEATURES:

- Detects 60Hz (domestic) and 50Hz (foreign) overhead power lines greater than 5 kV AC
- Dust and waterproof enclosure (IP 67 rated)
- Operates on 12-24 V DC
- Back-lit LED display
- Adjustable sensitivity level
- 120db external siren
- Sensitivity recall function
- E-stop/hydraulic integration can shutdown equipment or hydraulics when you are too close to power lines
- Antenna self test

HOW IT WORKS:

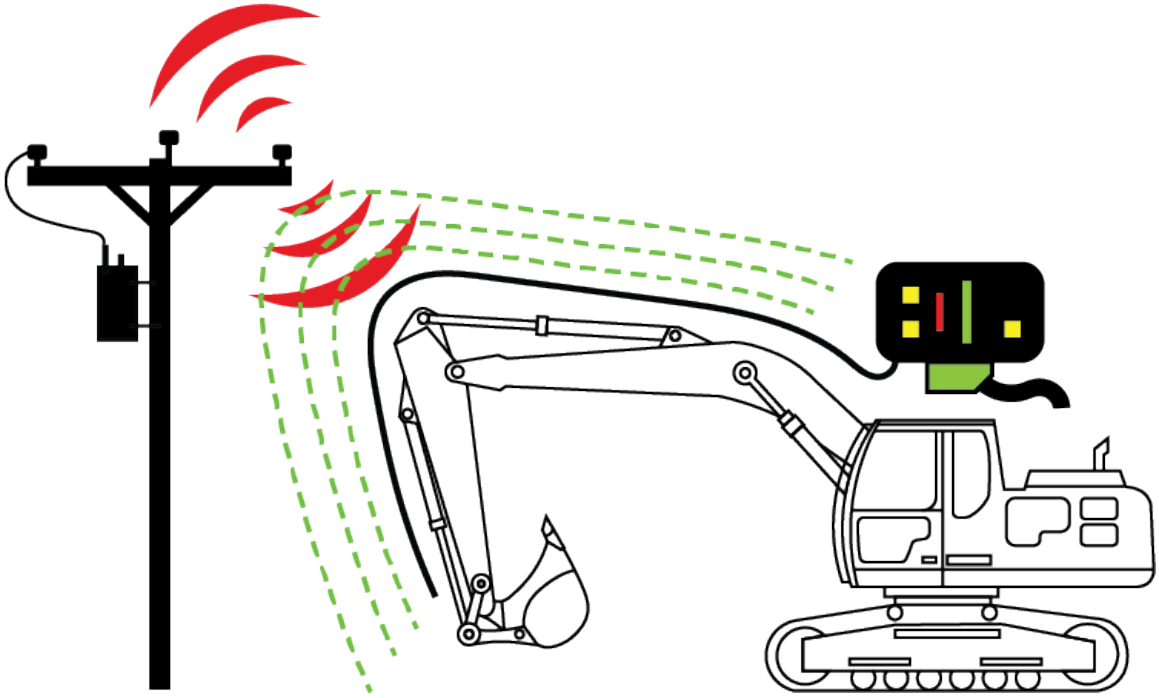

- Power lines are surrounded by an electric field (E-field).
- The strength of the E-field surrounding the power line is dependent on several variables such as but not limited to: voltage, the presence of multiple lines, and distance
- The NS uses a wire antenna running the length of the boom or mast of the equipment to detect E-field along it's entire length.
- The NS detects the relative strength of the E-field, translating it into audible and visual cues to help you stay away from power lines.
- Adjustable sensitivity allows the NS to compensate for higher or lower voltage power lines or overall distance from a power line
- The NS can be connected to the E-stop or hydraulic "dead-man" circuit on your equipment to stop your machine when the NS reaches a set threshold

VOLTEK NS INSTALLATION:

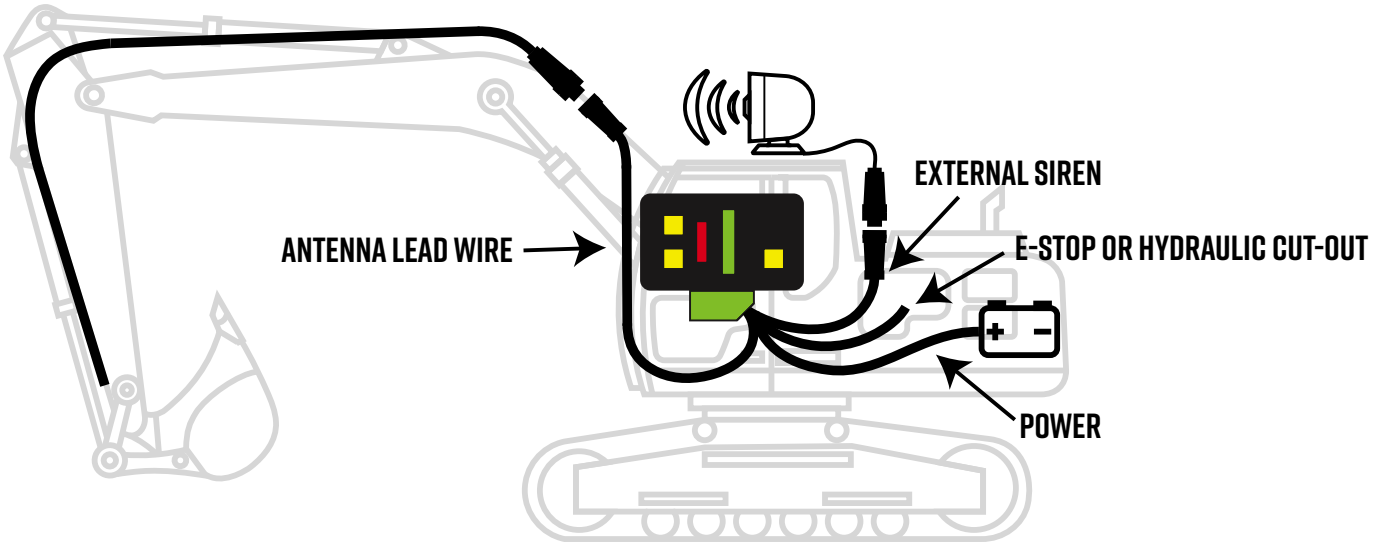

Example of an installation on an excavator

1.) Mounting the Voltek NS

2.) Installing wire harness

- Routing external siren wire
- Routing antenna lead wire
- Routing and installing power wires
- Routing and installing E-stop/hydraulic interrupt wires

3.) Mounting external siren

4.) Installing antenna

- Installing connector
- Terminating end of antenna

1.) Mounting the Voltek NS

- Mount Voltek NS main unit within arms reach of the operator
- Multiple mounting options are available upon request

2.) Installing the wiring harness

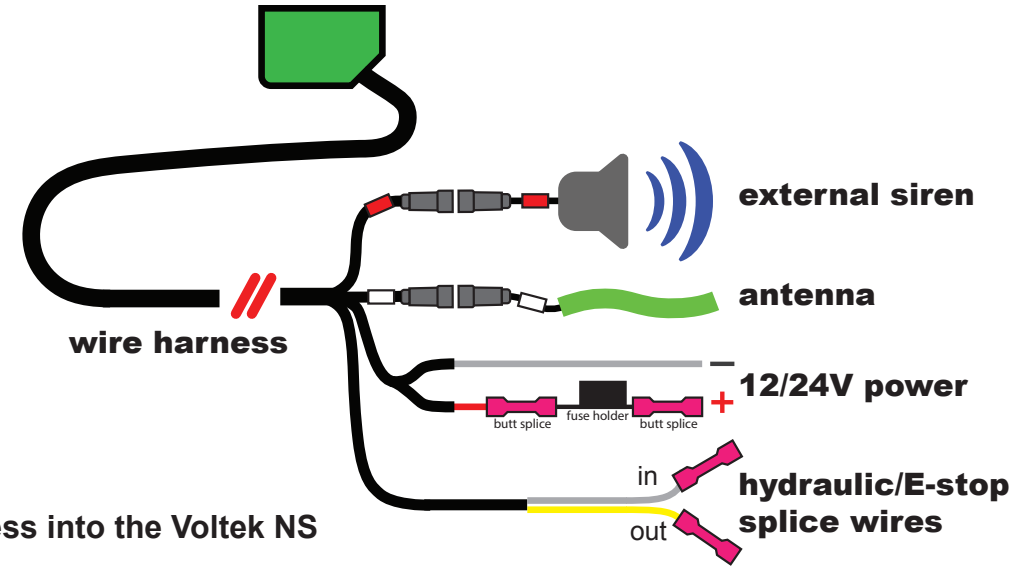

Plug harness into the Voltek NS

External siren cable (marked with red indicators)

- Route external siren cable towards the place you wish to mount the external siren (top of cab is recommended)

Antenna lead wire (marked with white indicators)

- Route antenna lead wire towards boom of equipment
- Run antenna lead wire up the boom as far as possible
- NOTE: this portion of antenna wire on the harness is NOT sensitive to the power line E-field

Power wires (red/black)

- The NS operates on either 12 or 24V DC power systems
- Route power wires (white and red) to power source
- The NS can be powered from the battery, ignition wires, or a PTO controlled power source, or a 12V Aux power source with a cigarette style power supply (upon request)
- Use supplied splices to attach the fuse holder (fuse included) to the positive (red) lead before connecting to power
- Connect positive (red) to power and negative to a sufficient ground

Hydraulic/E-stop wires (white/yellow)

- The NS can control either an E-stop circuit or dead-man hydraulic circuit by breaking continuity in the circuit when the NS reaches “SHUTDOWN” (see operation)
- Route the wire leads towards circuit you wish to control (“dead-man” circuit that controls overall boom movement is recommended)
- Splice into circuit using provided splices
- The NS will now open a relay-breaking continuity in this circuit when in SHUTDOWN mode causing the E-stop to shutdown or the hydraulics to deactivate (depending on which system you have integrated this feature with)

3.) Mounting external siren

- Mount siren on top of cab facing forwards or towards operating area of your equipment
- Plug harness siren cable (marked with red) into siren connector (also marked with red)

4.) Installing antenna

- Plug in antenna into the end of the antenna lead wire on harness
- Attach antenna to outermost or topmost hydraulic lines of your equipment with zip ties
- At joints between boom sections, be sure to leave enough extra wire to be able to flex with the boom
- At the end of the boom, trim off excess antenna and terminate using provided Antenna Termination Kit
- Strip black and white wire approx. 1/2”
- Use orange twist wire cap provided to twist wires together,
- Install provided heat shrink cap over orange wire cap to secure the wire cap in place (see figure below)

IMPORTANT NOTE:
Antenna wire ends MUST be connected together-otherwise the Voltek NS will indicate an antenna fault (indicated by dashed lines on E-field meter) and will not function.

You are now ready to use your Voltek NS system

SYSTEM OVERVIEW AND OPERATION:

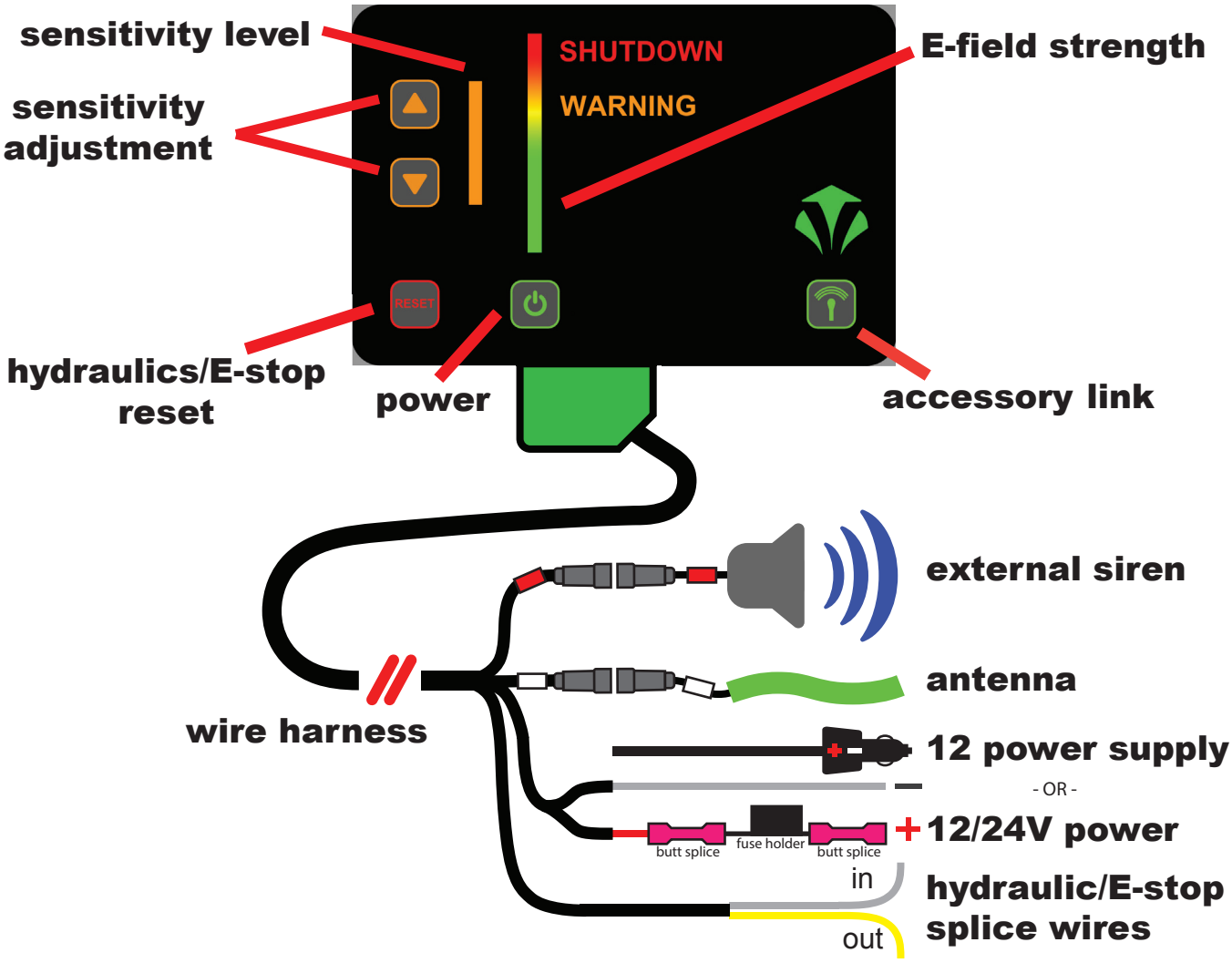

Turning the Voltek NS on:

The NS turns on as soon as it receives power from your machinery. If the NS is off,Press and hold the power button for 1 second. When Voltek NS is first turned on it will be set to maximum sensitivity. The Voltek RESET button also flashes for 15 seconds after first powering up. Pushing the flashing reset button will reset the Voltek NS to the previously selected sensitivity level when the unit was turned off. The Voltek NS will also perform a self test of the antenna check to ensure proper operation (E-field strength meter will indicate self test function with a dotted line).

Adjusting the sensitivity:

The sensitivity can be adjusted using the up or down buttons. As the sensitivity increases or decreases, the meter will display the current level of sensitivity in the overall range. When the sensitivity increases, the range which the Voltek NS will detect E-field gets larger and the NS indicates “warning” or “shutdown” from a further distance. Conversely, with a lower sensitivity selected the NS will indicate warning or shutdown from a closer distance to the power line.

E-Field strength meter:

The antenna of the Voltek NS is sensitive to certain frequencies within the E-field surrounding overhead power lines. The NS measures the relative intensity of these frequencies and displays this information on the color coded E-field strength meter.

- **GREEN** – Indicates relatively low E-field strength: you are within a safe distance of operation.
- **YELLOW** – Indicates strong E-field presence: you are operating within close proximity of a power line–work carefully and remain alert. When the Voltek NS indicates WARNING on the meter, the external siren will alert you with a pulsating tone with increasing frequency as you move closer to the power line.
- **RED** – Indicates very strong E-field - the Voltek NS will indicate SHUTDOWN and the siren will be in full alarm with a constant tone (If installed, the E-stop/hydraulic circuits will be interrupted, stopping or shutting down machine).

Setting the sensitivity level:

Always start with the Voltek with sensitivity set to maximum until you are able to locate nearby power lines. Once an overhead power line has been identified, adjust sensitivity accordingly. Move equipment to the closest proximity to the power line while maintaining a safe distance (no closer than 20 feet) and set the Voltek NS sensitivity to indicate SHUTDOWN, then move equipment away. Now the Voltek NS is set to your specific job-site and will prevent you from encroaching on your predetermined proximity to the power line.

Hydraulic system/E-stop integration:

The Voltek NS has a built in relay circuit which can integrate and control the hydraulic cut out or E-stop systems on your equipment and stop or shut down your machinery before it contacts a power line. When the Voltek NS E-field strength meter is in the red, it will indicate SHUTDOWN and break continuity with the circuit it is integrated with, which will disable your machine. Once this occurs, hold down the RESET button and move your equipment away from the E-field until meter is back in the yellow or green. If the reset button is released before you are back in the yellow or green, the Voltek NS will go back into shutdown mode.

IMPORTANT NOTE:

This feature is optional. For some applications, the sudden stopping of equipment due to this feature can potentially be hazardous. It is up to your discretion whether or not you wish to use this feature. This feature is not recommended for sidebooms/pipelayers, cranes or other machines that carry a swinging load.

Antenna self check:

The Voltek NS conducts a self check of the antenna every 30 seconds to ensure proper operation and to detect any faults with the system. The sensitivity meter will briefly display a dashed line when the antenna self check occurs. If a fault is detected, the sensitivity meter will continue to display a dashed line and you will hear an intermittent tone from the siren. A fault is usually caused by damage to the antenna. If this occurs, inspect antenna for cuts or other damage and replace if necessary.

Resetting SHUTDOWN alert: (if feature has been integrated with your equipment)

If the SHUTDOWN alert has been activated and the machinery has stopped operating or moving, press and ***HOLD*** the RESET button to allow the operator to move the equipment away from the power line until the E-field strength meter is in the yellow “warning” or green level. If the button is not held until the meter indicates yellow or green the SHUTDOWN mode will still be active.

Turning the Voltek NS off:

Press and hold the power button until the unit turns off (approximately two seconds).

THANK YOU!

Thank you for using our Voltek Systems products. Our goal is to keep you accident free and safe. Our products are designed with your day-to-day use in mind. If you have any questions, or comments you wish to share with us-please do! We value your time and your input. If you like the concept of our products but need to have things customized or changed to better suite your specific needs, please get in touch with us. Thanks again-have a safe and productive day!

CONTACT US:

United Safety Incorporated
3220 US Highway 93 S
Suite 2
Kalispell, MT 59901

www.volteksystems.com
(406) 249-9830

www.volteksystems.com